Installation Manual

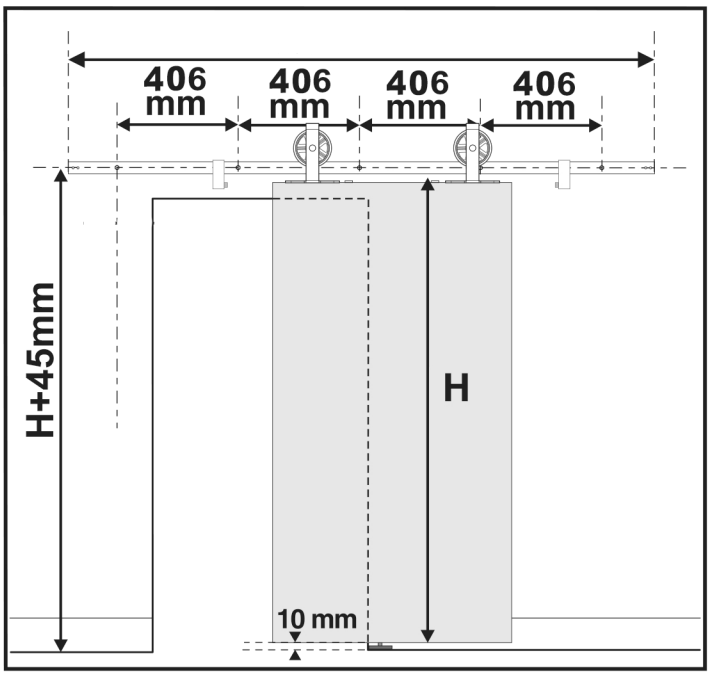

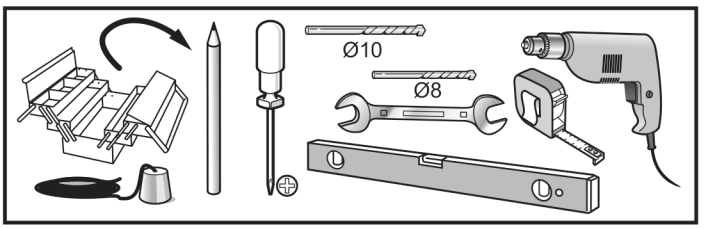

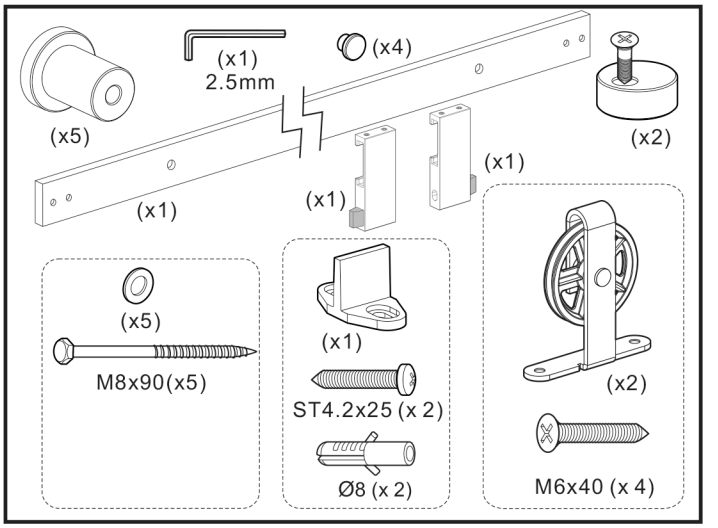

1

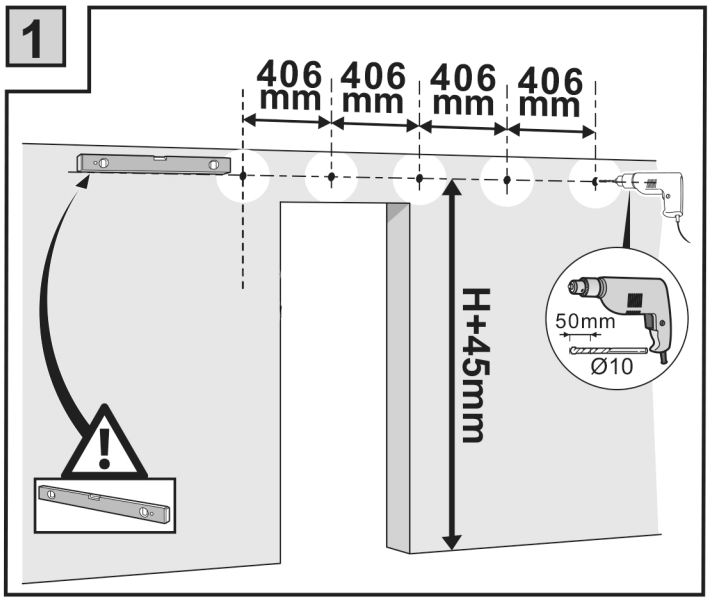

3

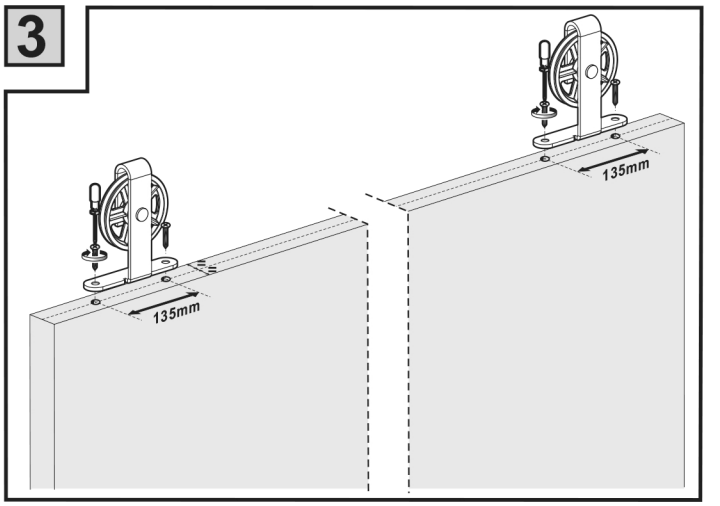

2

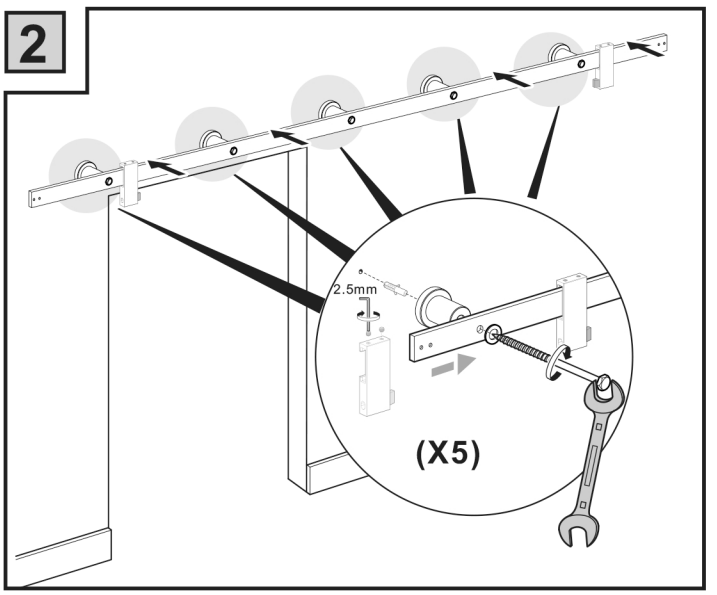

4

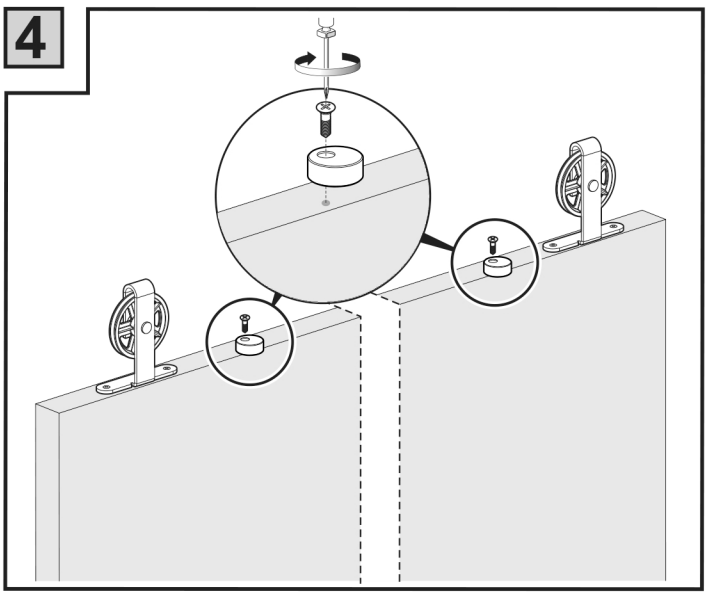

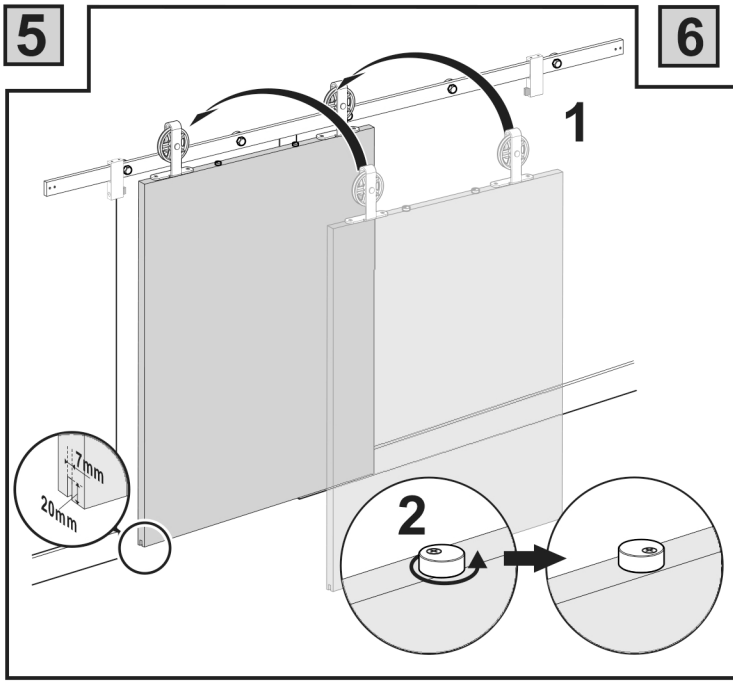
5
1
2
7mm
20mm

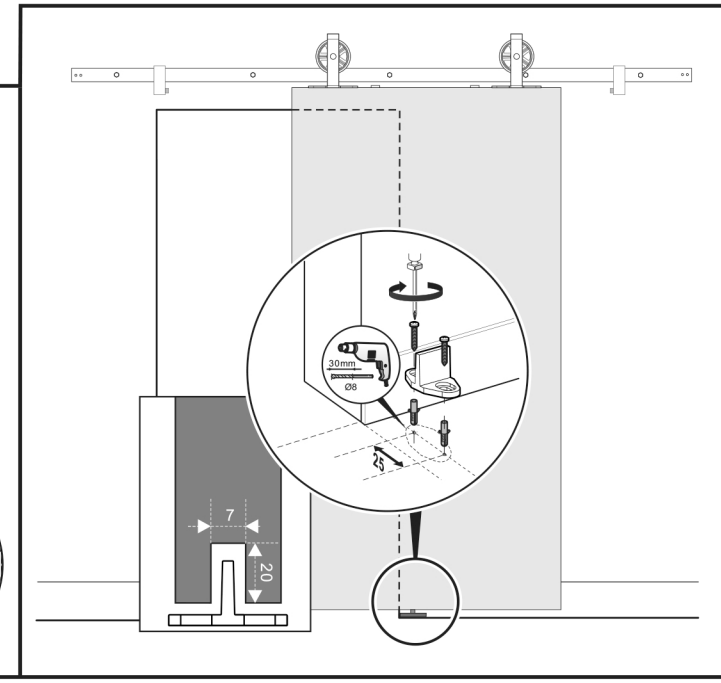
6
30mm
Ø8
25
7
20

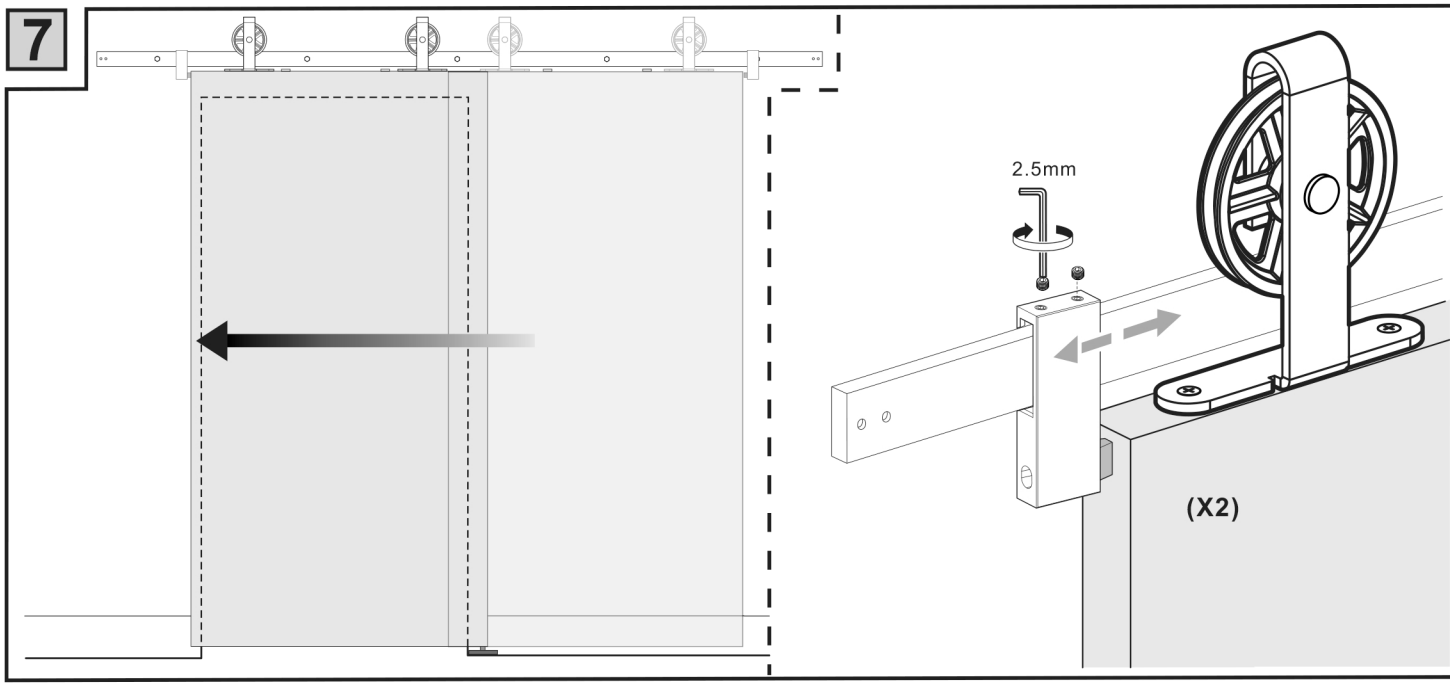
7
2.5mm
(X2)

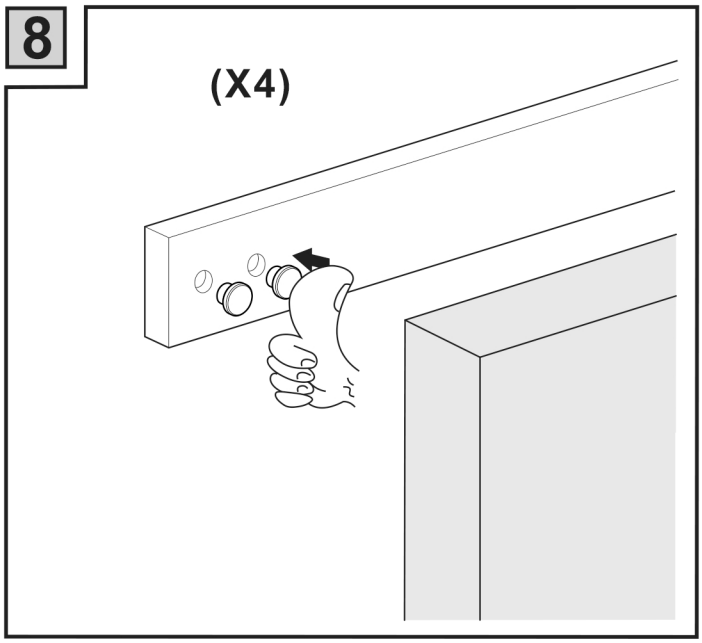
8
(X4)